	RELAY10			RELAY 11			RELAY12			POWER	
	NO	V_IN	NC	NO	V_IN	NC	NO	V_IN	NC	5V	GND
A											
5											
DYN4											

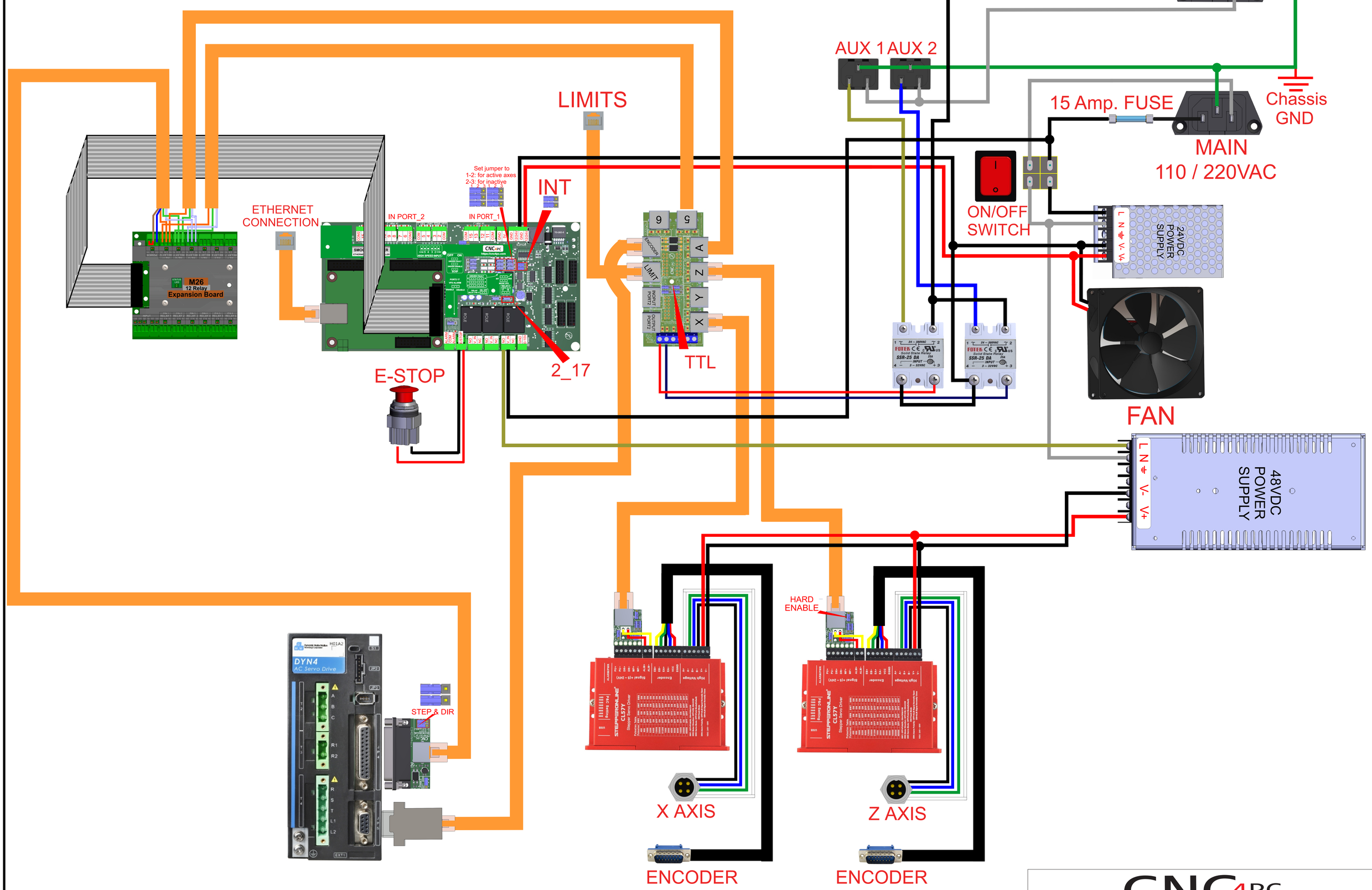

Note :
This wiring is just to illustrate a sample product application.
Specific wiring may vary from system to system.
It is the users responsibility to implement it correctly.

CNC4PC
Integration Solutions for CNC Projects
http://www.cnc4pc.com

Designed : HVM	Date : OCTOBER-22-2021
Revised : YAC	Status : PRELIMINARY
Item : CD_27	Ver. : 1
Description : Wiring C82 for Lathe	